THIS DRAWING IS UNPUBLISHED. RELEASED FOR PUBLICATION -.- .
© COPYRIGHT - By - ALL RIGHTS RESERVED.

LOC	DIST
GP	00

REVISIONS

P	LTR	DESCRIPTION	DATE	DWN	APVD
	P	REVISED PER ECO-11-004835	11MAR11	RK	HMR

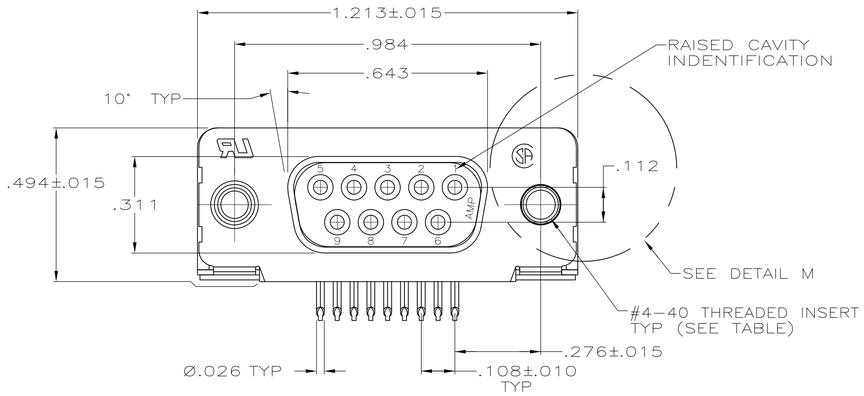

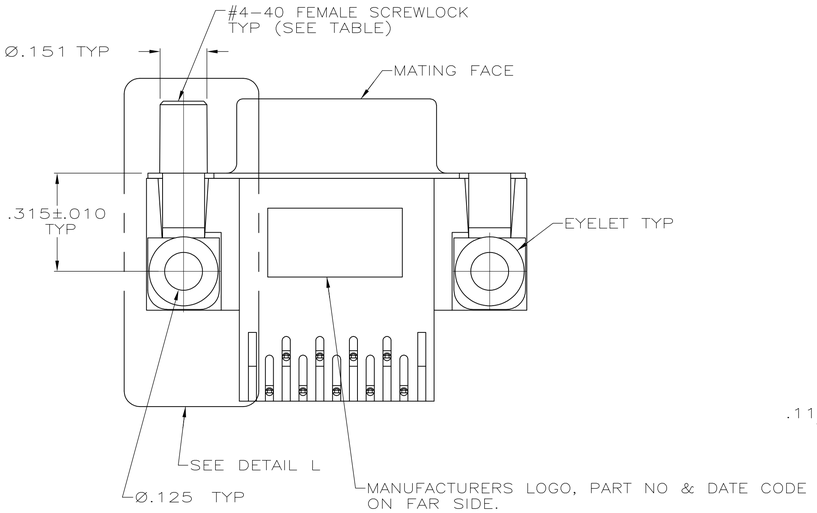

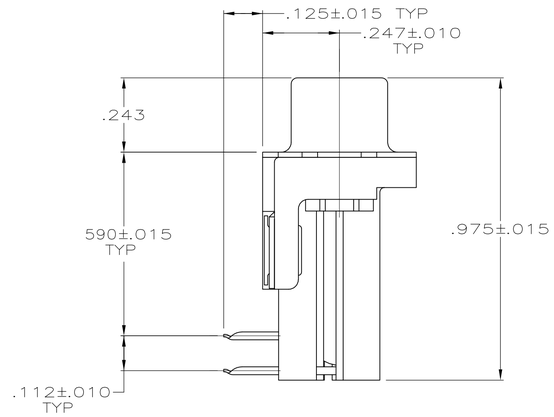

1. CONNECTOR MATES WITH ANY 9 POSN PLUG IN AMPLIMITE SERIES & COMPLIES WITH AMP SPEC 108-40005 WHERE APPLICABLE.

2. MOLDED PARTS: FLAME RETARDANT 94V-0 RATED THERMOPLASTIC, BLACK.
SHELL: STEEL.
CONTACTS: PHOSPHOR BRONZE.
EYELETS: BRASS.
SCREWLOCKS: ZINC.
INSERTS: ZINC.

3. SHELL: BRIGHT TIN.
CONTACTS: .000030 GOLD FOR A DISTANCE OF .100 MIN FROM MATING END, TIN PLATED .000100-.000200 ON SOLDER POST, ALL OVER .000050 NICKEL.
EYELETS: TIN.
SCREWLOCKS: CLEAR CHROMATE.
INSERTS: CLEAR CHROMATE.

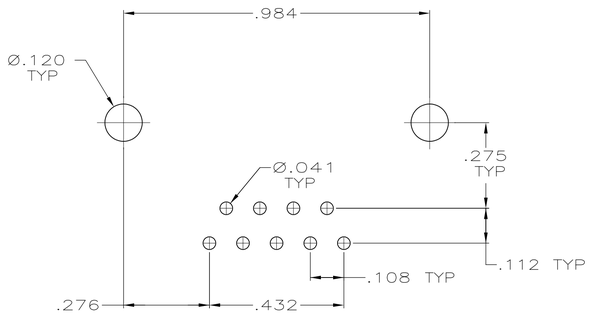

PC BOARD MOUNTING DIMENSIONS

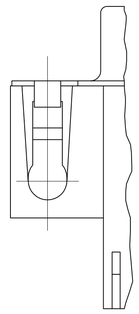

DETAIL L

TYP BOTH ENDS

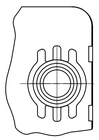

DETAIL M

FOR -6 ONLY

FEMALE SCREWLOCKS	5745988-6
THREADED INSERTS	5745988-4
MOUNTING HARDWARE	PART NUMBER

COPYRIGHT 2005
TE CONNECTIVITY CORP
ALL RIGHTS RESERVED

THIS DRAWING IS A CONTROLLED DOCUMENT.

DIMENSIONS: INCHES

TOLERANCES UNLESS OTHERWISE SPECIFIED:
0 PLC ± -
1 PLC ± -
2 PLC ± -
3 PLC ± .005
4 PLC ± -
ANGLES ± 2°

MATERIAL 2

FINISH 3

DWN 04-08-05 A. FERNANDEZ-DOCK5
CHK 04-08-05 J.GERACE
APVD 04-08-05 M. WALMSLEY

PRODUCT SPEC 108-40025
APPLICATION SPEC 114-40010
WEIGHT -

TE Connectivity

NAME RCPT ASSY, SIZE 1, RTANG, W/FRONT METAL SHELL, .026 DIA POSTS, AMPLIMITE HD-20 (.590 FOOTPRINT) SHORT LEG

SIZE	CAGE CODE	DRAWING NO	RESTRICTED TO
A1	00779	C-5745988	-

CUSTOMER DRAWING | SCALE 4:1 | SHEET 1 OF 1 | REV P

4805 (3/11)